XNP-6040H

2M H.265 NW 4.3x PTZ Camera

Key Features

- Max. 2Megapixel (1920 x 1080) resolution
- 2.8 ~ 12mm (4.3x), 24x digital zoom
- H.265, H.264, MJPEG codec
- WiseStreamII/IP66, IK10 Support, Multiple streaming
- Day & Night (ICR), WDR (150dB)
- Digital image stabilization with Built-in Gyro sensor
- Motion/Direction/Fog/Audio detection
- SD/SDHC/SDXC memory slot (Max. 512GB), PoE / 12V DC

Accessories (Optional)

SBP-301HM2

SBP-301HM5

SBV-136B

SBP-300WM1

SBP-300WM

SBP-300NB

SBP-300KM

SBP-300CM

SBP-300LM

SBP-300PM

SBP-300B

 © 2019 Hanwha Techwin Co., Ltd. All rights reserved.

Video	
Imaging Device	1/2.8" 2MP CMOS
Effective Pixels	1945(H)x1097(V)
Min. Illumination	Color: 0.015Lux(F1.4, 1/30sec) BW: 0.0015Lux(F1.4, 1/30sec)
Video Out	CVBS: 1.0 Vp-p / 75Ω composite, 720x480(N), 720x576(P) for installation USB: Micro USB type B, 1280x720 for installation
Lens	
Focal Length (Zoom Ratio)	2.8~12mm(4.3x) zoom
Max. Aperture Ratio	F1.4
Angular Field of View	H: 119.5˚(Wide)~27.9˚(Tele) / V: 62.8˚(Wide)~15.7˚(Tele) / D: 142.1˚(Wide)~32.0˚(Tele)
Min. Object Distance	Wide: 1.5m(4.92ft), Tele: 2m(6.56ft)
Focus Control	Oneshot AF
Lens Type	DC auto iris
Pan / Tilt / Rotate	
Pan Range	0˚ ~ 350˚
Pan Speed	0.1˚/sec ~60˚/sec
Tilt Range	0˚ ~90˚
Tilt Speed	0.1˚/sec ~60˚/sec
Sequence	Preset(300ea), Swing, Group(6ea), Trace, Tour, Auto Run, Schedule
Preset Accuracy	±0.5˚
Azimuth	Support
Auto Tracking	Support
Operational	
Camera Title	Displayed up to 85 characters
Day & Night	Auto(ICR)
Backlight Compensation	BLC, HLC, WDR, SSDR
Wide Dynamic Range	150dB
Digital Noise Reduction	SSNRV
Digital Image Stabilization	Support(built-in gyro sensor)
Defog	Support
Motion Detection	8ea, 8point polygonal zones
Privacy Masking	32ea, rectangular Support - Color: Grey/Green/Red/Blue/Black/White - Mosaic
Gain Control	Low / Middle / High
White Balance	ATW / AWC / Manual / Indoor / Outdoor
Electronic Shutter Speed	Minimum / Maximum / Anti flicker (2~1/12,000sec)
Video Rotation	Flip, Mirror
Analytics	Directional detection, Fog detection, Face detection, Motion detection, Appear/Disappear, Enter/Exit, Loitering, Tampering, Virtual line, Audio detection, Sound classification

 © 2019 Hanwha Techwin Co., Ltd. All rights reserved.

Serial Interface	RS-485(Samsung-T, Pelco-D/P, Panasonic, Bosch, AD, GE, Vicon, Honeywell)
Alarm I/O	Input 1ea / Output 1ea
Alarm Triggers	Analytics, Network disconnect, Alarm input
Alarm Events	File upload via FTP and e-mail Notification via e-mail SD/SDHC/SDXC or NAS recording at event triggers Alarm output PTZ Preset
Audio In	Selectable(mic in/line in) Supply voltage: 2.5VDC(4mA), Input impedance: 2K Ohm
Audio Out	Line out, Max.output level: 1Vrms
Network	
Ethernet	RJ-45(10/100BASE-T), SFP(Optional)
Video Compression	H.265/H.264,MJPEG
Resolution	1920x1080, 1280x1024, 1280x960, 1280x720, 1024x768, 800x600, 800x448, 720x576, 720x480, 640x480, 640x360, 320x240
Max. Framerate	H.265/H.264: Max. 60fps/50fps(60Hz/50Hz) MJPEG: Max. 30fps/25fps(60Hz/50Hz)
Smart Codec	Manual(5ea area), WiseStreamⅡ
Bitrate Control	H.264/H.265: CBR or VBR MJPEG: VBR
Streaming	Unicast(20 users) / Multicast (128 user) Multiple streaming(Up to 10 profiles)
Audio Compression	G.711 u-law /G.726 Selectable G.726(ADPCM) 8KHz, G.711 8KHz G.726: 16Kbps, 24Kbps, 32Kbps, 40Kbps AAC-LC: 48Kbps at 16KHz
Protocol	IPv4, IPv6, TCP/IP, UDP/IP, RTP(UDP), RTP(TCP), RTCP,RTSP, NTP, HTTP, HTTPS, SSL/TLS, DHCP, FTP, SMTP, ICMP, IGMP, SNMPv1/v2c/v3(MIB-2), ARP, DNS, DDNS, QoS, PIM-SM, UPnP, Bonjour,LLDP, SRTP
Security	HTTPS(SSL) Login Authentication Digest Login Authentication IP Address Filtering User access log 802.1X Authentication(EAP-TLS, EAP-LEAP)
Edge Storage	Micro SD/SDHC/SDXC 2slot 512GB
Application Programming Interface	ONVIF Profile S/G/T SUNAPI(HTTP API) Wisenet open platform
Web Viewer	Supported OS: Windows 7, 8.1, 10, Mac OS X 10.10, 10.11, 10.12 Recommended Browser: Google Chrome Supported Browser: MS Explore11, MS Edge, Mozilla Firefox(Window 64bit only), Apple Safari(Mac OS X only)
Memory	1024MB RAM, 256MB Flash
Environmental	
Operating Temperature / Humidity	-30°C~+55°C (-22°F~+131°F) / Less than 90% RH
Storage Temperature / Humidity	-30°C~+60°C (-22°F~+140°F) / Less than 90% RH
Certification	IP66, IK10
Electrical	
Input Voltage	DC12V, HPoE(IEEE802.3bt, Class7)

 © 2019 Hanwha Techwin Co., Ltd. All rights reserved.

Power Consumption	DC12V: Max. 8.6W PoE : Max. 9.6W
Mechanical	
Color / Material	Ivory / Aluminum
Product dimensions / weight	Ø136x106mm(5.35x4.17"), 780g(1.72 lb)

- The lastest product information / specification can be found at hanwha-security.com
- Design and specifications are subject to change without notice.
- Wisenet is the proprietary brand of Hanwha Techwin , formerly known as Samsung Techwin.

 © 2019 Hanwha Techwin Co., Ltd. All rights reserved.

This parts should not contain any substances which are specified in AB60-0033K

NO	PART NAME	CODE NO.	MATERIAL	Q'TY	REMARK
1			MATERIAL	1	REMARK

단위:mm(인치)

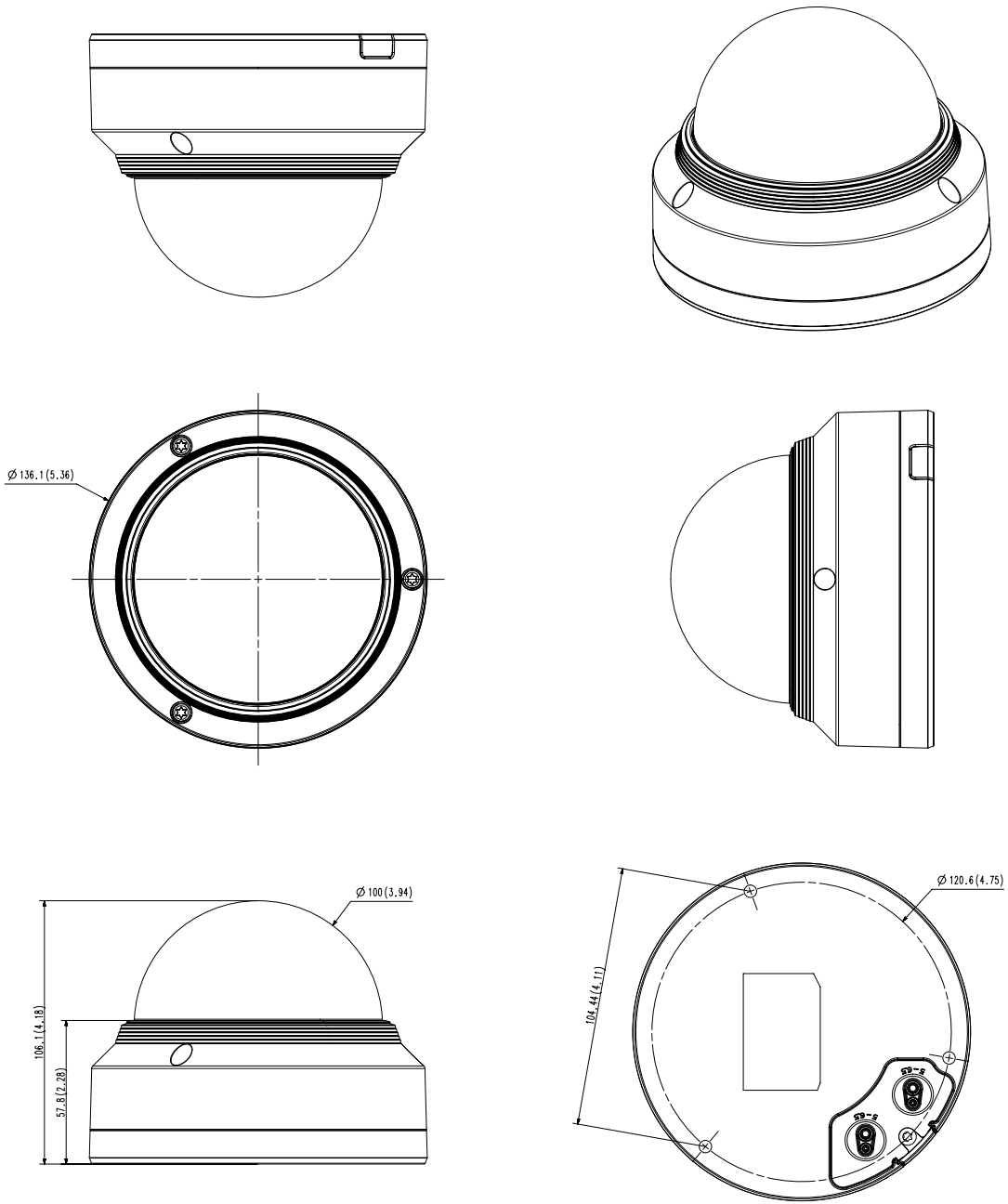

Hanwha Techwin

08-2019 © 2019 Hanwha Techwin Co., Ltd. All rights reserved.

A1 CHANGE	UNIT	mm	DESIGN	CHECK	APPROVAL	PART NAME: ASSY_XNP-6040H
	SCALE					MODEL NAME: XNP-6040H
	Hanwha Techwin					CODE NO.