XND-6080RV

2M H.265 NW IR Dome Camera

Key Features

- 2.8 ~ 12mm (4.3x) motorized varifocal lens
- Max. 60fps@all resolutions (H.265/H.264)
- Day & Night (ICR), WDR(150dB)
- Loitering, Directional detection, Fog detection
- Digital auto tracking, Sound classification, Tampering
- Motion detection, Handover
- Dual SD slots (Max. 512GB)
- Hallway view, WiseStream II support
- IR viewable length 30m, IK08

Accessories (Optional)

SBP-300HM8

SHD-3000F4

SBP-300WM1

SBP-300WM

SBP-300NB

SBP-300KM

SBP-300CM

SBP-300LM

SBP-300PM

SBP-300B

© 2019 Hanwha Techwin Co., Ltd. All rights reserved.

Video	
Imaging Device	1/2.8" 2MP CMOS
Effective Pixels	1945(H)x1109(V)
Min. Illumination	Color: 0.015 lux(F1.4, 1./30sec) B/W: 0 Lux (IR LED On)
Video Out	CVBS: 1.0 Vp-p / 75Ω composite, 720x480(N), 720x576(P), for installation USB: Micro USB Type B, 1280x720, for installation
Lens	
Focal Length (Zoom Ratio)	2.8~12mm(4.3x) motorized varifocal
Max. Aperture Ratio	F1.4(Wide) ~ F3.6(Tele)
Angular Field of View	H: 119.5°(Wide)~27.9°(Tele), V: 62.8°(Wide)~15.7°(Tele), T: 142.1°(Wide)~32.0°(Tele)
Min. Object Distance	0.5m(1.64ft)
Focus Control	Simple focus
Lens Type	DC auto iris, P iris
Pan / Tilt / Rotate	
Pan / Tilt / Rotate Range	0˚~354˚ / 0˚~67˚ / 0˚~355˚
Operational	
IR Viewable Length	30m(98.4ft)
Camera Title	Displayed up to 85 characters
Day & Night	Auto(ICR)
Backlight Compensation	BLC, HLC, WDR, DWDR, SSDR
Wide Dynamic Range	150dB
Digital Noise Reduction	SSNRV
Digital Image Stabilization	Support
Defog	Support
Motion Detection	8ea, 8point polygonal zones
Privacy Masking	32ea, polygonal zones - Color: Grey/Green/Red/Blue/Black/White - Mosaic
Gain Control	Low / Middle / High
White Balance	ATW / AWC / Manual / Indoor / Outdoor
LDC	Support
Electronic Shutter Speed	Minimum / Maximum / Anti flicker (2~1/12,000sec)
Video Rotation	Flip, Mirror, Hallway view(90˚/270˚)
Analytics	Defocus detection, Directional detection, Fog detection, Face detection, Motion detection, Digital auto tracking, Appear/Disappear, Enter/Exit, Loitering, Tampering, Virtual line, Audio detection, Sound classification
Alarm I/O	Input 1ea / Output 1ea
Alarm Triggers	Analytics, Network disconnect, Alarm input
Alarm Events	File upload via FTP and E-Mail Notification via E-Mail SD/SDHC/SDXC or NAS recording at Event Triggers Alarm output Handover

 © 2019 Hanwha Techwin Co., Ltd. All rights reserved.

Audio In	Selectable(Mic in/Line in, Built-in mic), Supply voltage: 2.5VDC(4mA), Input impedance: 2K Ohm
Audio Out	Line out, Max. output level: 1Vrms
Network	
Ethernet	RJ-45(10/100BASE-T)
Video Compression	H.265/H.264: Main/Baseline/High, MJPEG
Resolution	1920x1080, 1280x1024, 1280x960, 1280x720, 1024x768, 800x600, 800x448, 720x576, 720x480, 640x480, 640x360, 320x240
Max. Framerate	H.265/H.264 : Max. 60fps/50fps(60Hz/50Hz) MJPEG: Max. 30fps/25fps(60Hz/50Hz)
Smart Codec	Manual(5ea area) WiseStreamⅡ
Bitrate Control	H.264/H.265: CBR or VBR MJPEG: VBR
Streaming	Unicast(20 users) / Multicast Multiple streaming(Up to 10 profiles)
Audio Compression	G.711 u-law /G.726 Selectable G.726(ADPCM) 8KHz, G.711 8KHz G.726 : 16Kbps, 24Kbps, 32Kbps, 40Kbps AAC-LC : 48Kbps at 16KHz
Protocol	IPv4, IPv6, TCP/IP, UDP/IP, RTP(UDP), RTP(TCP), RTCP,RTSP, NTP, HTTP, HTTPS, SSL/TLS, DHCP, FTP, SMTP, ICMP, IGMP, SNMPv1/v2c/v3(MIB-2), ARP, DNS, DDNS, QoS, PIM-SM, UPnP, Bonjour , LLDP, SRTP
Security	HTTPS(SSL) Login Authentication Digest Login Authentication IP Address Filtering User access Log 802.1X Authentication(EAP-TLS, EAP-LEAP)
Edge Storage	Micro SD/SDHC/SDXC 2slot 512GB
Application Programming Interface	ONVIF Profile S/G/T SUNAPI(HTTP API) Wisenet open platform
Web Viewer	Supported OS: Windows 7, 8.1, 10, Mac OS X 10.10, 10.11, 10.12 Recommended Browser: Google Chrome Supported Browser: MS Explore11, MS Edge, Mozilla Firefox(Window 64bit only), Apple Safari(Mac OS X only)
Memory	1024MB RAM, 256MB Flash
Environmental	
Operating Temperature / Humidity	-10°C ~ +55°C(-14°F ~ +131°F) / Less than 90% RH
Storage Temperature / Humidity	-50°C ~ +60°C(-58°F ~ +140°F) / Less than 90% RH
Certification	IK08
Electrical	
Input Voltage	PoE(IEEE802.3af, Class3), 12VDC
Power Consumption	PoE : Max 10W 12VDC : Max 9W
Mechanical	
Color / Material	Ivory / Aluminum
Product dimensions / weight	Ø140.8x113.0mm(Ø5.54x4.45"), 724g(1.6 lb)

 © 2019 Hanwha Techwin Co., Ltd. All rights reserved.

- The lastest product information / specification can be found at hanwha-security.com
- Design and specifications are subject to change without notice.
- Wisenet is the proprietary brand of Hanwha Techwin , formerly known as Samsung Techwin.

05-2019 © 2019 Hanwha Techwin Co., Ltd. All rights reserved.

This parts should not contain any substances which are specified in AH60-0033K

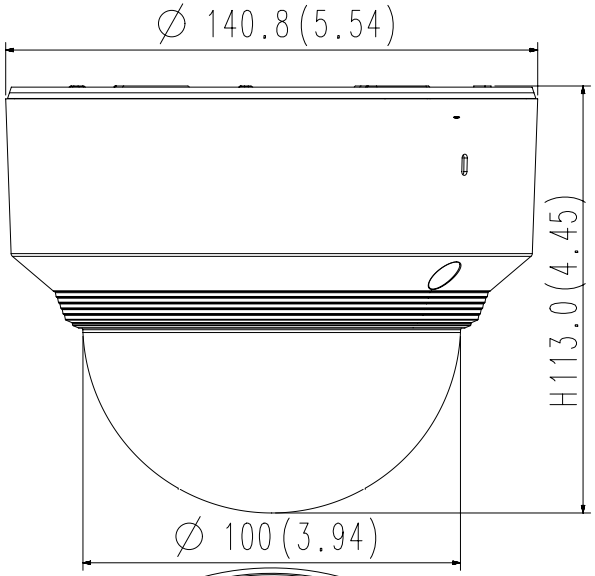

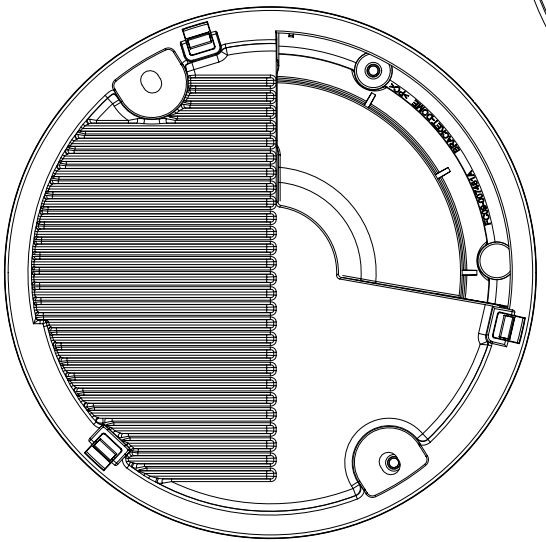

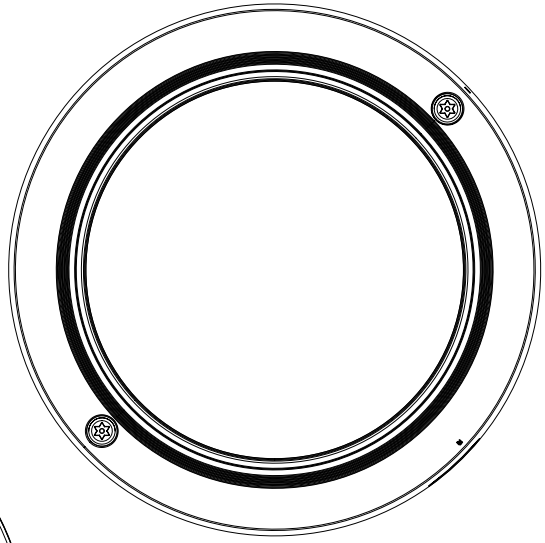

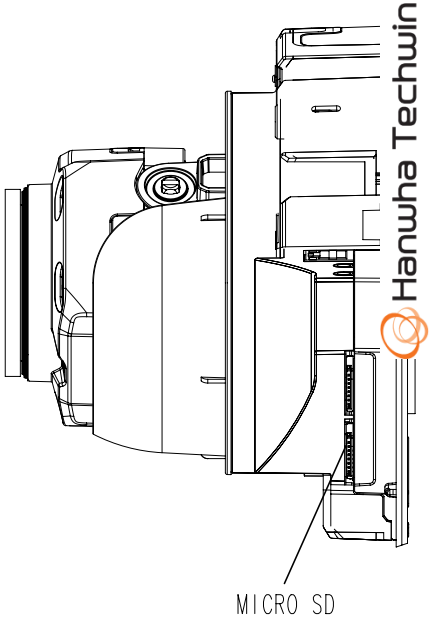

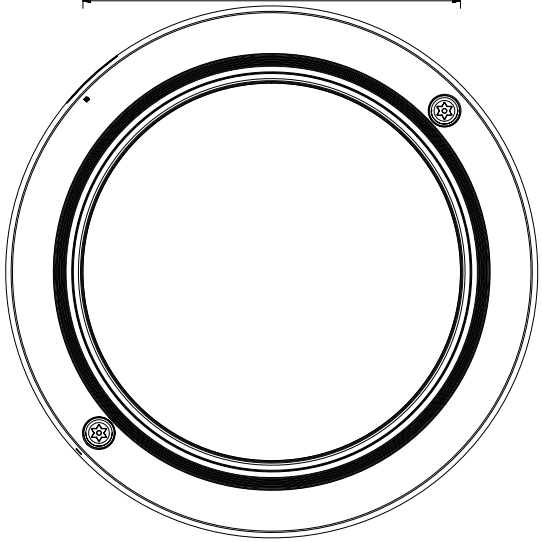

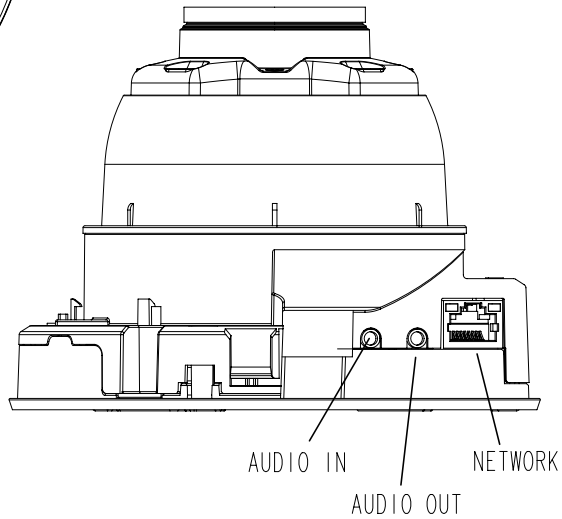

XND-6080V/6080RV/8080RV

Unit : mm(inch)

A2

Hanwha Techwin

05-2019 © 2019 Hanwha Techwin Co., Ltd. All rights reserved.